# ASKARI Panel & Flange

## Specification

| | |
|---|---|
| Operating Voltage | 9-28Vdc |
| Operating Current | 5-36mA |
| Current Consumption Nom | See Tones Table Below |
| Operating Temperature | -25°c - +70°c |
| Monitoring Mode | Reverse Polarity |
| Second Tone | Connect third wire to -ve |
| Internal Fuse | N/A |
| Case Material | ABS |
| Environment Category | Type A/B |
| Ingress Protection | IP65 |

## Dimensions

Askari Panel

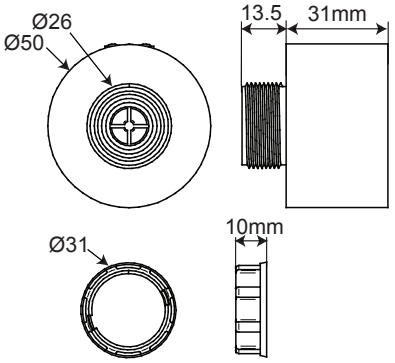


Askari Flange

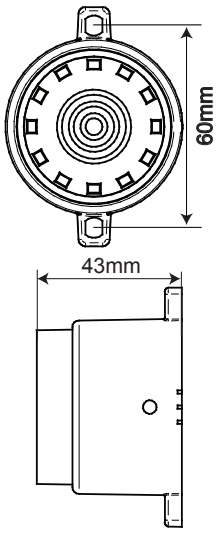


## Connection Details

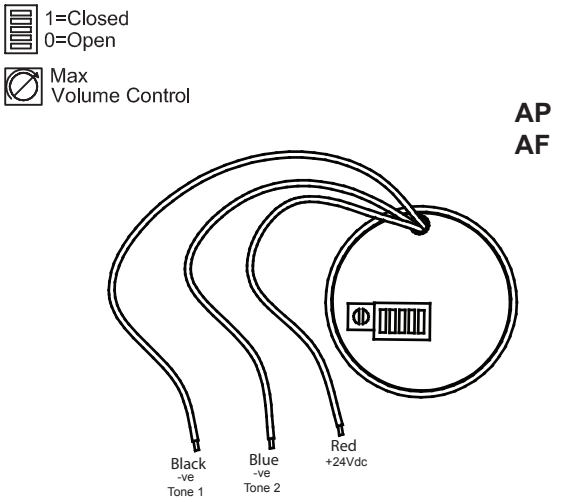


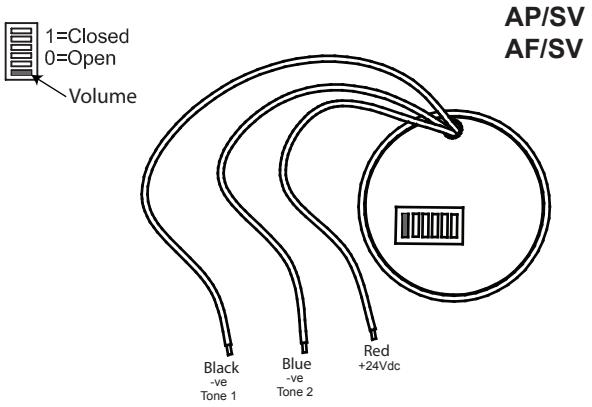


## Tones table

| | | | Pattern | Frequency Hz | Rate | Depiction | Main Application | Askari Panel mA | Askari Panel dB (A) | Askari Flange mA | Askari Flange dB (A) |
|---|---|---|---|---|---|---|---|---|---|---|---|
| 1 | 14 | 11111 | Alternating | 800 & 970 | 2Hz (250ms-250ms) | | BS Fire | 12 | 93 | 12 | 93 |
| 2 | 14 | 11110 | Sweep | 800 to 970 | 7Hz (7/s) | | BS Fire | 14 | 97 | 12 | 92 |
| 3 | 14 | 11101 | Sweep | 800 to 970 | 1Hz (1/s) | | BS Fire | 12 | 97 | 12 | 94 |
| 4 | 14 | 11100 | Continuous | 2850 | Steady | | General Purpose | 31 | 98 | 32 | 95 |
| 5 | 4 | 11011 | Sweep | 2400 to 2850 | 7Hz | | General Purpose | 36 | 94 | 40 | 100 |
| 6 | 4 | 11010 | Sweep | 2400 to 2850 | 1Hz | | General Purpose | 35 | 104 | 41 | 102 |
| 7 | 14 | 11001 | Slow whoop | 500 to 1200 | 3s sweep, 0.5 s silence, then repeat | | Dutch fire (NEN 2575) | 12 | 106 | 14 | 95 |
| 8 | 14 | 11000 | Sweep (DIN) | 1200 to 500 | 1Hz | | German fire (DIN 33 404) | 15 | 99 | 15 | 94 |
| 9 | 4 | 10111 | Alternating | 2400 & 2850 | 2Hz (250ms-250ms) | | General Purpose | 29 | 98 | 33 | 97 |
| 10 | 14 | 10110 | Intermittent | 970 | 0.5Hz (1s On/1s Off) | | PFEER alert | 10 | 99 | 12 | 92 |
| 11 | 14 | 10101 | Alternating | 800 & 970 | 1Hz (500ms-500ms) | | BS Fire | 12 | 93 | 12 | 92 |
| 12 | 4 | 10100 | Intermittent | 2850 | 0.5Hz (1s On/1s Off) | | General Purpose | 20 | 94 | 28 | 94 |
| 13 | 14 | 10011 | Intermittent | 970 | 0.8Hz (250ms On/1s Off) | | General Purpose | 6 | 92 | 6 | 92 |
| 14 | 1 | 10010 | Continuous | 970 | Steady | | PFEER toxic gas | 14 | 93 | 12 | 92 |
| 15 | 14 | 10001 | Alternating | 554 & 440 | 100ms-400ms | | French fire (NFS 32-001) | 17 | 98 | 15 | 94 |
| 16 | 19 | 10000 | Intermittent | 660 | 3.3Hz (150ms On/150msOff) | | Swedish (Air Raid) | 8 | 95 | 7 | 92 |
| 17 | 19 | 01111 | Intermittent | 660 | 0.28Hz(1.8s On/1.8s Off) | | Swedish (Local warning) | 8 | 96 | 9 | 93 |
| 18 | 19 | 01110 | Intermittent | 660 | 0.05Hz (13s Off / 6.5Hz On) | | Swedish (Pre-mess) | 12 | 96 | 10 | 93 |
| 19 | 1 | 01101 | Continuous | 660 | Steady | | Swedish (All clear) | 12 | 96 | 10 | 93 |
| 20 | 19 | 01100 | Alternating | 554 & 440 | 0.5Hz (1s On/1s Off) | | Swedish (Turn out) | 16 | 98 | 15 | 94 |
| 21 | 14 | 01011 | Intermittent | 660 | 1Hz (500ms-500ms) | | Swedish general purpose | 8 | 96 | 9 | 93 |
| 22 | 14 | 01010 | Intermittent | 2850 | 4Hz (150ms On/100ms Off) | | Pelican crossing | 20 | 93 | 18 | 94 |
| 23 | 14 | 01001 | Sweep | 800 to 970 | 50Hz | | BS Fire | 13 | 96 | 12 | 92 |
| 24 | 4 | 01000 | Sweep | 2400 to 2850 | 50Hz | | General Purpose | 36 | 104 | 41 | 99 |
| 25 | 14 | 00111 | Intermittent | 970 | 3 x 500ms pulses, 1.5s silence, then repeat | | ISO 8201 | 9 | 93 | 9 | 92 |
| 26 | 14 | 00110 | Intermittent (I*) | 800 to 970 | 3 x 500ms pulsed sweep, 1.5s silence, then repeat | | ISO 8201 | 7 | 98 | 8 | 93 |
| 27 | 14 | 00101 | Intermittent (I*) | 970 & 800 | 3 x 500ms pulsed sweep, 1.5s silence, then repeat | | ISO 8201 | 8 | 92 | 8 | 92 |
| 28 | 10 | 00100 | Alternating | 800 & 970 | 2Hz (250ms-250ms) | | BS Fire | 12 | 93 | 11 | 92 |
| 29 | 988Hz | 00011 | Alternating | 990 & 650 | 2Hz (250ms-250ms) (Symphoni tones) | | BS Fire | 22 | 97 | 16 | 96 |
| 30 | 510Hz | 00010 | Alternating | 510 & 610 | 2Hz (250ms-250ms) (Squashni Micro tones) | | BS Fire | 16 | 96 | 15 | 93 |
| 31 | 14 | 00001 | Sweep | 300 to 1200 | 1Hz | | General Purpose | 23 | 99 | 20 | 94 |
| 32 | 510Hz | 00000 | Alternating | 510 & 610 | 1Hz (500mS-500mS) | | BS Fire | 17 | 96 | 16 | 94 |


Cooper Fulleon Ltd, Cwmbran, South Wales, UK
See Fulleon Web Site : www.fulleon.co.uk